BAE SYSTEMS

Submarine Design and the Development of the Astute Class

Presented by **Kevin Young BEng(Hons) CEng MIMechE**

Head of Engineering – Design Improvement

BAE Systems Submarines Solutions

4th December 2007

Contents

- BAE Systems & the Barrow Shipyard
- Why Submarines?
- The Requirement
- The Astute Design
- The Product
- Build Strategy
- Construction
- Major Modules
- Roll out and Naming Ceremony
- Trim Dive
- Questions

BAE Systems & The Barrow Shipyard

BAE Systems Submarine Solutions

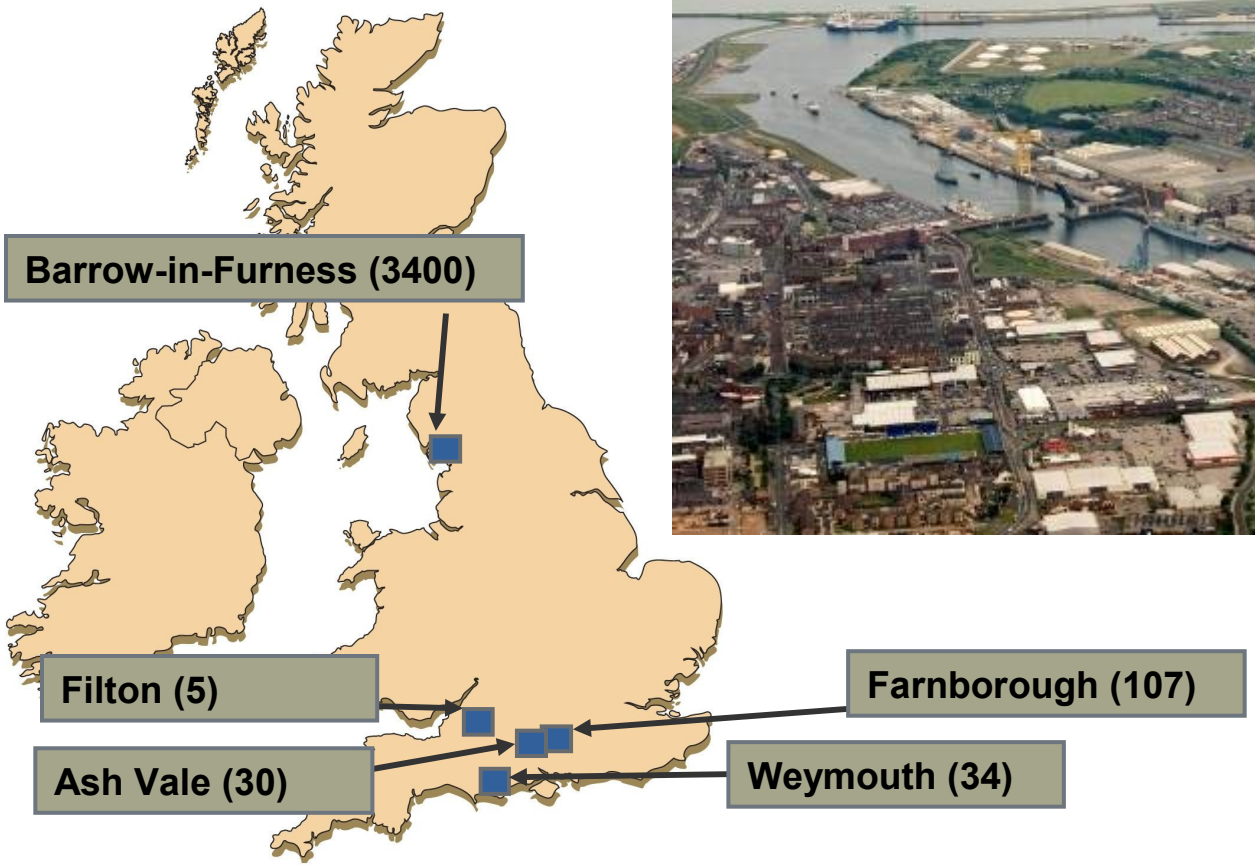

What we currently do…

- Design, build and preliminary in-service support for 4 Astute class submarines for the Royal Navy. Bidding for boat 5.
- The delivery of the Swiftsure and Trafalgar class update programme for the Royal Navy
- Industry lead for successor SSBN programme
- CVF Engineering and Block build
- Export contract with Spain for build strategy and manufacture of dome pieces for Spanish submarine programme

First of Class Pedigree

T42 (7)
Sheffield

Invincible (3)

T42 (Stretch) (4)
Manchester

Ocean (1)

Wave (2)

Albion (2)

Swiftsure (6)

1980

Trafalgar (7)

1985

Upholder (4)

1990

Vanguard (4)

1995

Upholder/
Victoria (4)

2000

Astute (3+)

Brief History - Submaries

- First Royal Navy Submarine was Holland 1 built in Barrow in 1901
- Early Naval submarines were designed to operate predominantly on the surface, only diving to remain concealed (normally during the day). The submarines would submerge to attack a target and then remain submerged to make their escape.
- Early submarines were powered in two ways – diesel powered on the surface, electrically powered whilst submerged. Limited running time underwater
- The German Navy are said to have been the first to use diesel engines (1906) and to deploy a snorkel (1940').
- The first nuclear submarine – USS Nautilus (1954)
- First Royal Navy Submarine was HMS Dreadnought, built in Barrow

Why Submarines?

Why Submarines?

- The ultimate stealth vessels - can fulfil roles no other vessel can:
  - Go anywhere underwater
  - Anti submarine and anti surface ship capability
  - Deny enemies the use of an area
  - Gather data (both electronically and visually)
  - Undertake precise strike / land attack
  - (Virtually) invulnerable nuclear deterrent
  - Assymetric force
- Stealth
  - you don’t know it’s there, AND you don’t know it’s not there !

Why Nuclear?

- Can stay underwater for very long periods
  - doesn't need refuelling,
  - produce their own oxygen/water supplies,
  - Can completely circumnavigate the world underwater
  - the only limit on time underwater is food and crew endurance.
- Can deploy rapidly and covertly to any area of the globe
  - Much higher sustained speeds than diesel electric boats
  - No need to surface or snort
- Greater Stored Energy
  - Boat can be larger with more capability and greater crew comfort
  - Able to support more weapons/sensors

The Requirement

The Requirement

- The Royal Navy operates two different types of submarine SSN, SSBN
- SSBN provide the nuclear deterrent
  - The Royal Navy have 4 Vanguard class SSBNs 150m long, 16000 T
- SSNs are ‘Hunter/Killer’ Submarines
  - Anti submarine/ship warfare
  - Surveillance
  - Reconnaissance
  - Land attack using missiles.
- The RN currently has 9 SSNs, each about 85m long, weighing about 4600Te
  - Swiftsure & Trafalgar Classes
  - Astute is SSN20

The Astute Design

Design

- The Original Theory (Batch 2 Trafalgar):

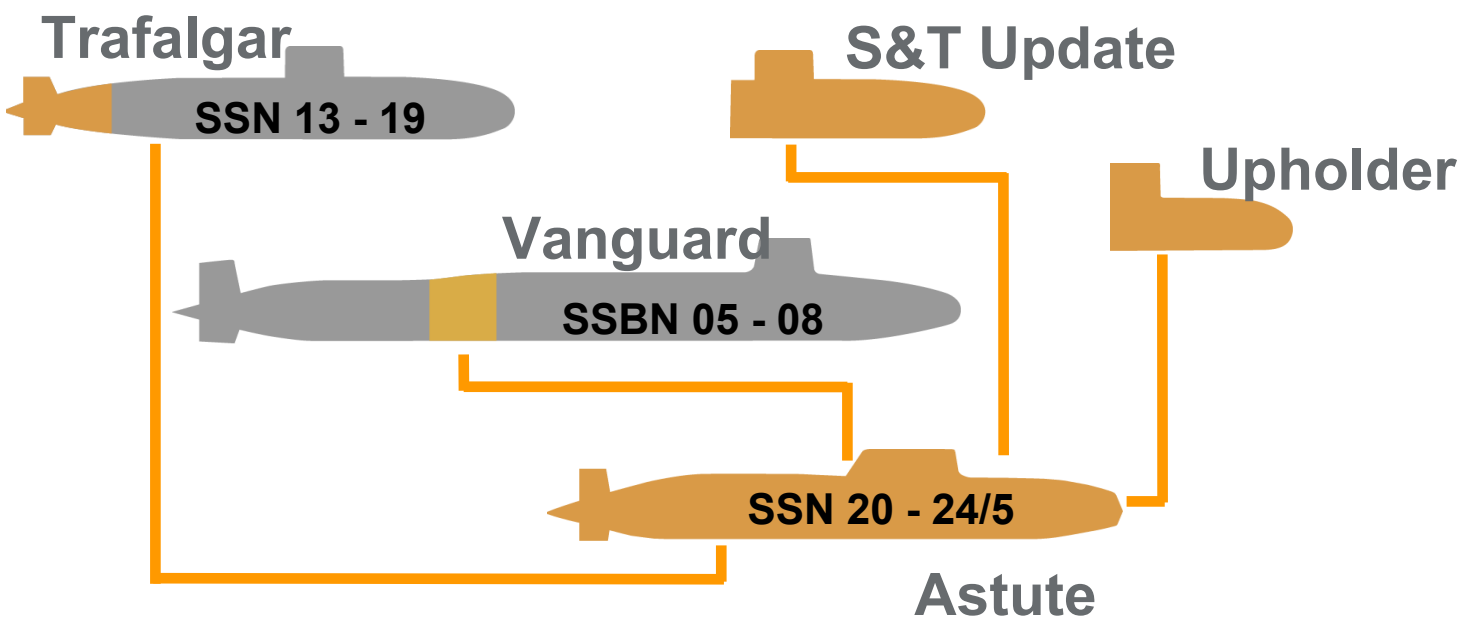

- The Reality: Greater weapons/sensors capacity, enhanced Reactor safety, enhanced boat safety and modular build means:
  - A longer, wider and heavier boat than originally planned
  - over 70% of components are new or re-qualified

The Product

Astute Class

- 97m long
- 10m draught
- 11.3 beam
- Displaces 7,400 tonnes submerged
- Depth >300m
- >25 knots
- 6 Torpedo tubes
- Stowage for 1.5 x T class weapons
  - Spearfish
  - Tomahawks
- PWR2 Pressurised Water Reactor – fuelled for life
- Astute's sonar suite has the processing power of c1,000 Pentium IV computers

A Complex Design

- The Astute Boat 1 plan comprises:
  - 3000 requirements
  - 7,100 drawings
  - 29,000 build activities
  - 96,000 installable items
  - 10,000 devices

- A Nuclear Submarine built today by BAE Systems is comparable in engineering complexity with current space programmes (as recognised in US research programmes).

A Complex Design

	Space Shuttle	Astute
Length, Diameter	38m, 7m	97m, 10.7m
Weight	78 T.e.	7400 T.e.
Components	3 main engines 368 km of cable 1,060 valves 27,000 tiles	Nuclear reactor, 2 diesel generators, weapons 148 km of cable 23,000 pipes, 5,000 valves 50,000 tiles
Crew	5 - 7	97
Mission Duration, Design Life	5 – 16 days, 100 missions	> 90 days, 25 years
Environment	190 – 350 miles above sea level, vacuum	Below sea level, very high pressure, corrosive
Speed	17500 m.p.h.	> 25 knots

General Layout

Engine Room

Reactor Compartment

Command Deck

Accommodation

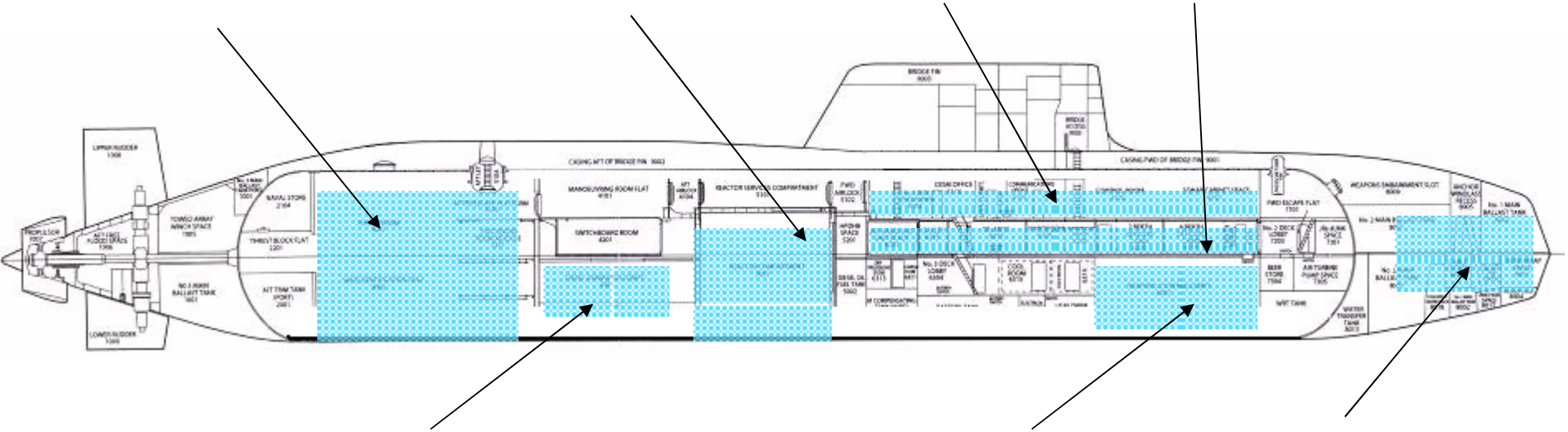

Diesel Generators

Weapons Stowage Compartment

Bow Array

Build Strategy

Build Strategy

- Construction Elephant
- Modular Construction
- Pre-outfit
- Modularisation
- Maximise Construction Facilities

HMS Astute - Boat 1122 Build Definition

Construction

Explaining Build Stages

Units that make up the Astute Submarine

DDH Build Line Prior to Combination of Boat

Vertical Outfit

- Parallel / concurrent working fronts
- 360 degree working internal / external of unit
- More efficient equipment installation (improves access to pressure hull outfitting)
- Allows a greater number of tradesmen to work at one time
- Allows the use of cranes rather than fleeting / end loading
- Staging is lifted in and out with crane in levels, hence no building taking part inside unit

Horizontal Outfit Units Ready for Combination

Structural Welding

- Materials
  - HY80 derivative and HSLA 80
- Weld techniques
  - Submerged Arc automated for pressure hull (virtually defect free on Astute)
  - Flux Core for remainder
- NDE techniques
  - Radiography largely replaced by Time of Flight Tip Diffraction Ultrasonics allied to phased array sensing of near surface crack tip detection.
- Increasingly fabrications (often weld clad) are replacing castings

Other Welding

- Pipe Materials
  - 316L Stainless Steel (thick and thin wall)
  - 254 SMO Super Duplex Stainless Steel
  - 3602 Carbon Steel
  - 70/30 Copper/Nickel
  - 90/10 Copper Nickel
  - Monel K500
- Overall there are 57,000 pipe welds
- Many are high integrity welds with strict QA controls
- NDE
  - Radiography still dominant
  - 18,000 pipe welds demand radiography

Accuracy & Dimensional Control

Accuracy Control

- Necessary survey points established in plan
- Key to modularisation
- Interfaces are defined and maintained throughout evolving design

Dimensional Control

- As-built information collected for further analysis
- Interfaces managed in CAD before join up

Advantages:

- **Minimise rework**
- **Build under control and confidence**

Major Modules

Submarine Assembly – Major Modules

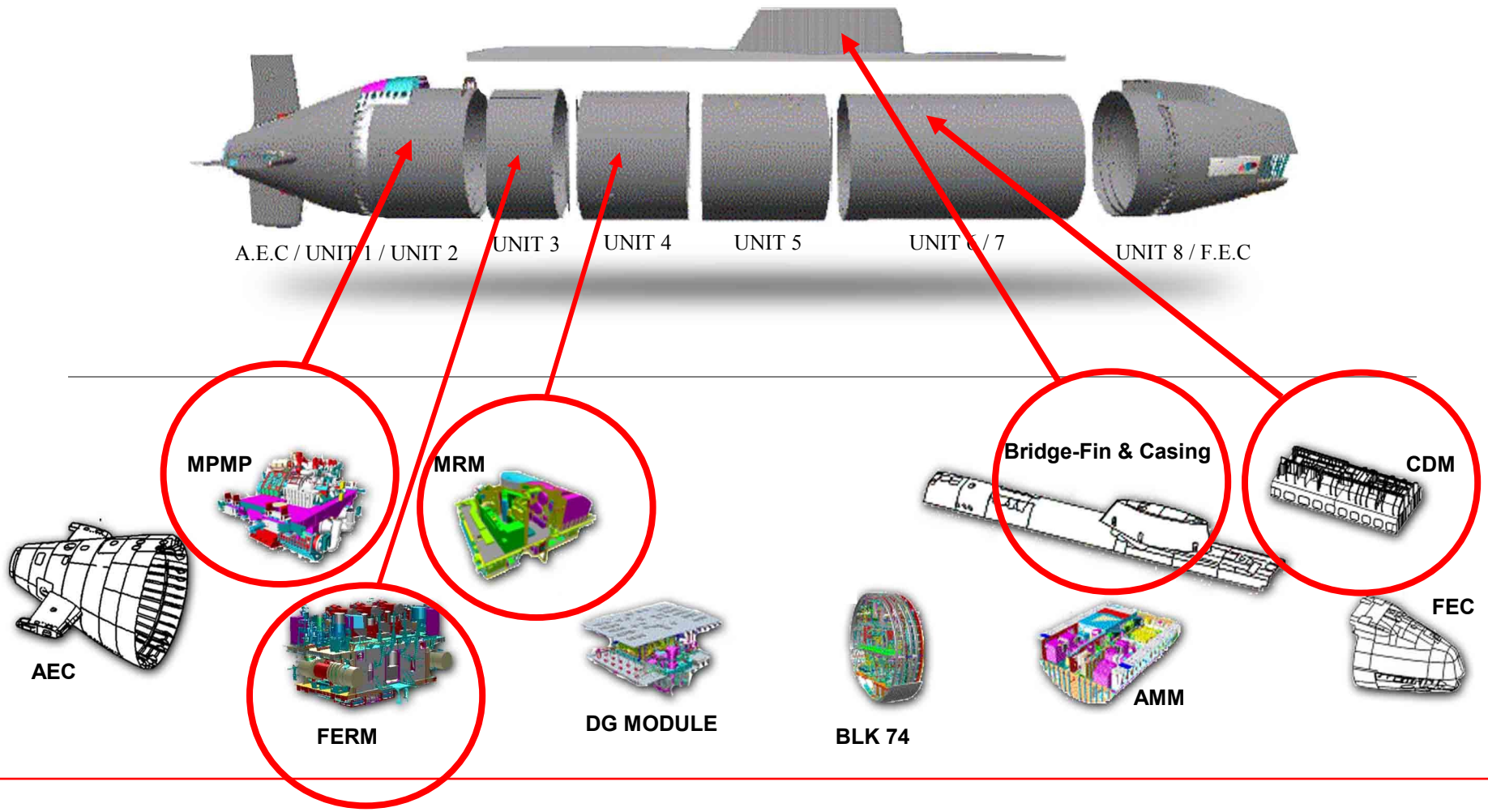

Submarine Assembly – Major Modules

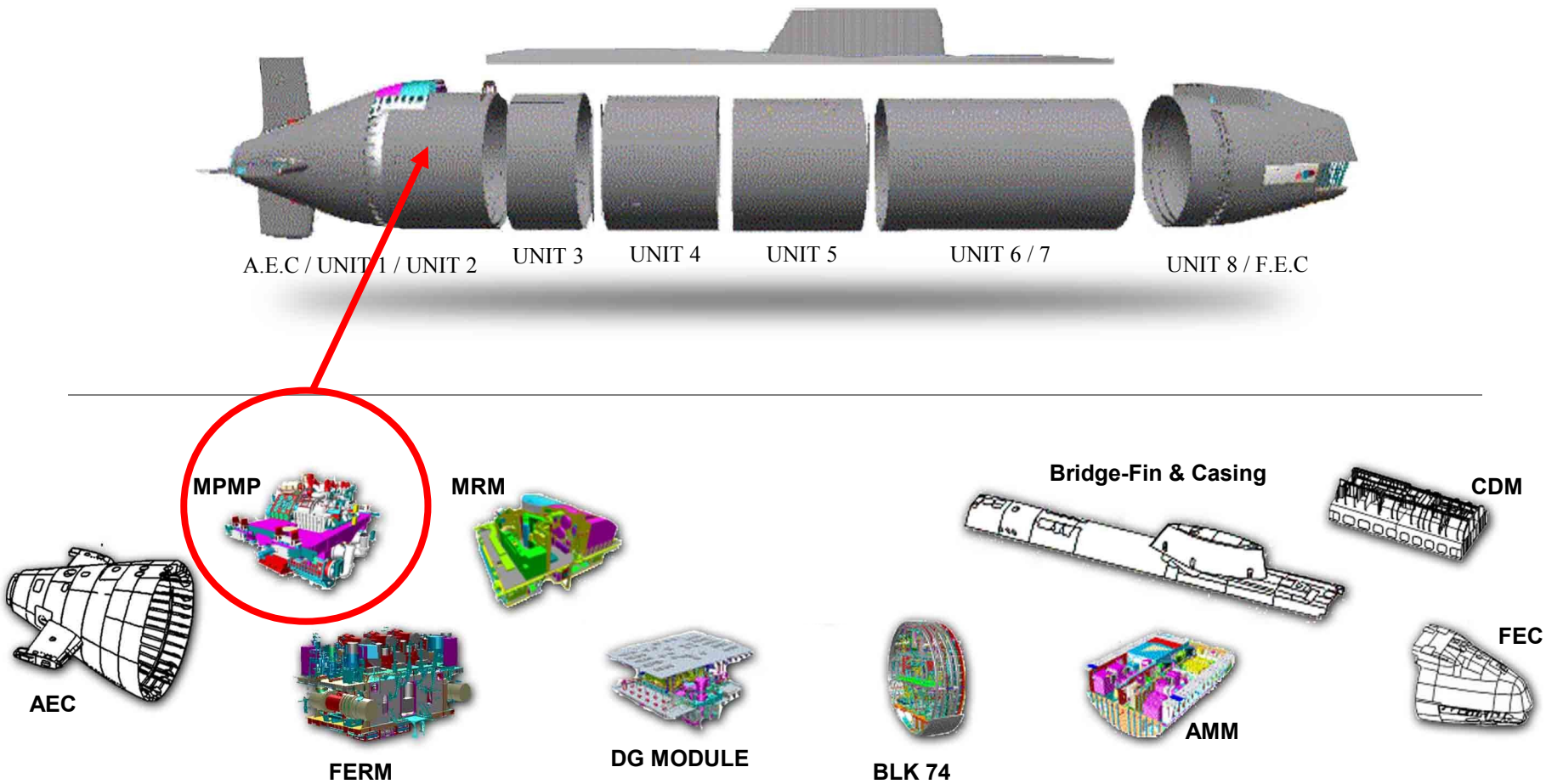

Main Propulsion Machinery Package (MPMP)

MPMP Pictorial

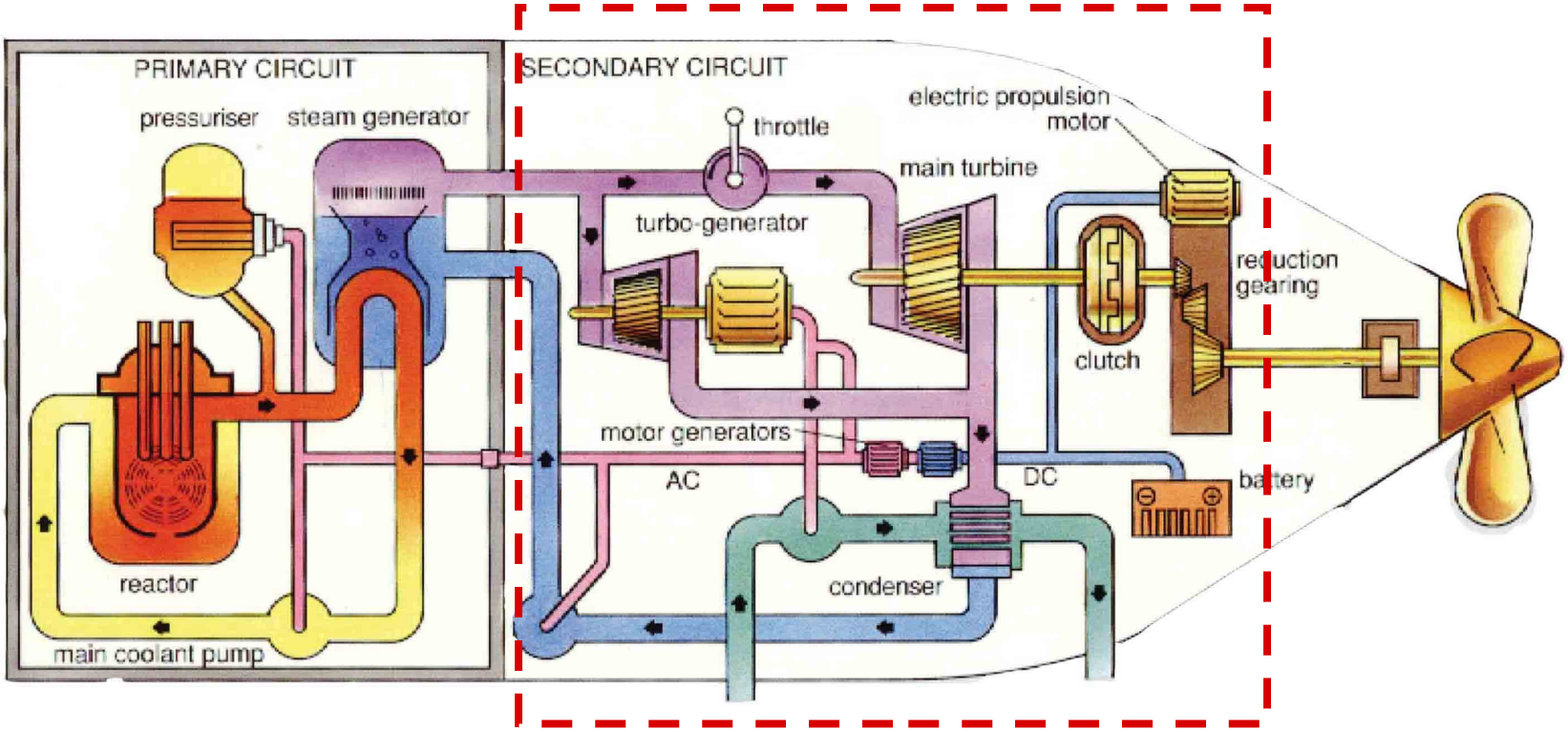

Facts about Astute MPMP

- Astute MPMP took 4 years 8 months to Build, Test & Ship
- During Trials the Main Shaft turned 1,693,832 revolutions. This would mean the submarine would have travelled from Barrow to Australia (8671 Miles)
- There are 1,263 Pipes fitted to the MPMP
- There are 11,500 meters of cable fitted to the MPMP
- 3105 Tonnes of fuel oil was used (683,920 gallons)
- 10.9 Billion litres of sea water was pumped; enough to fill 4,034 Olympic-size swimming pools

Main Machinery Propulsion Package (MPMP)

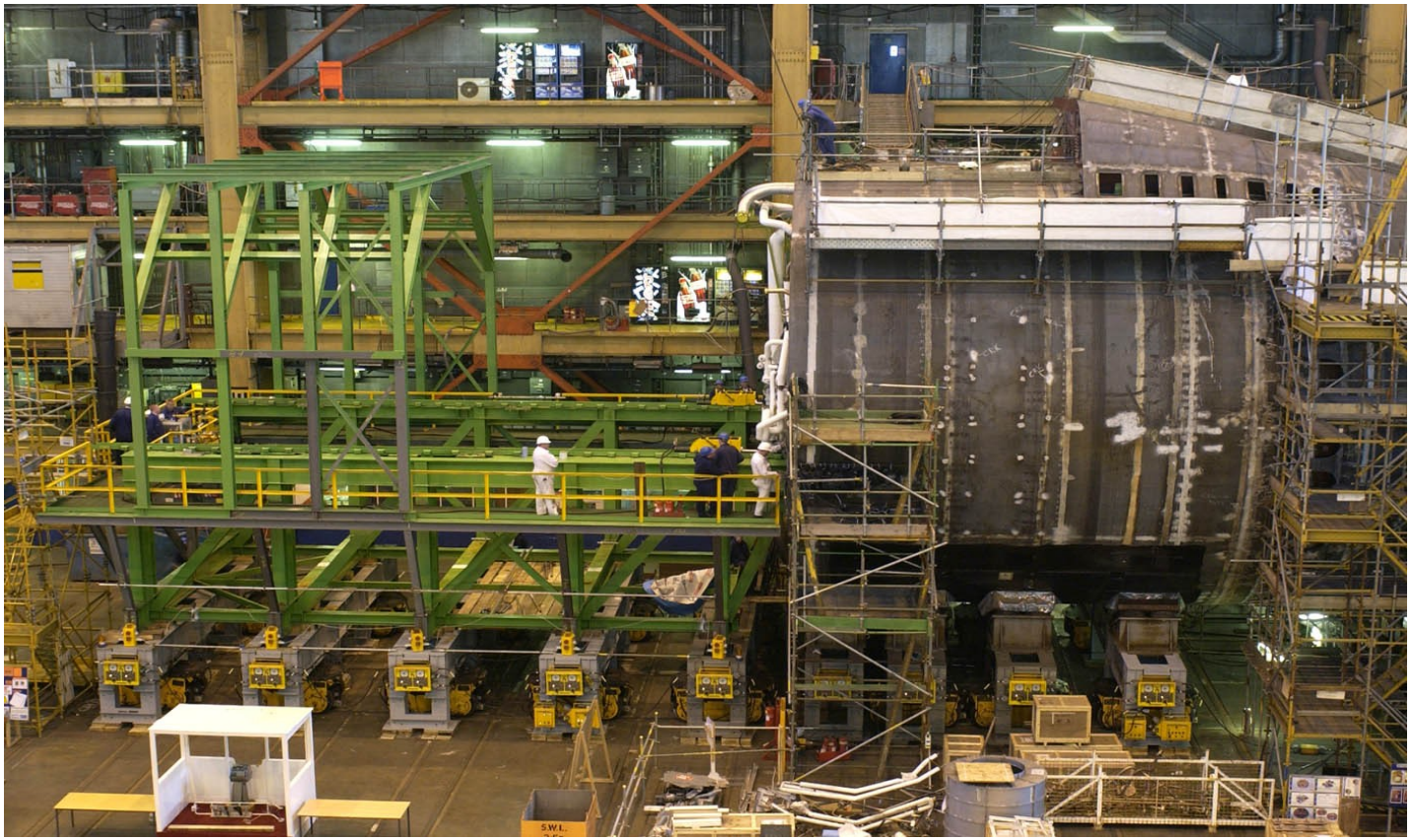

Shipped 10th June 2005 into Unit 2

Submarine Assembly – Modules

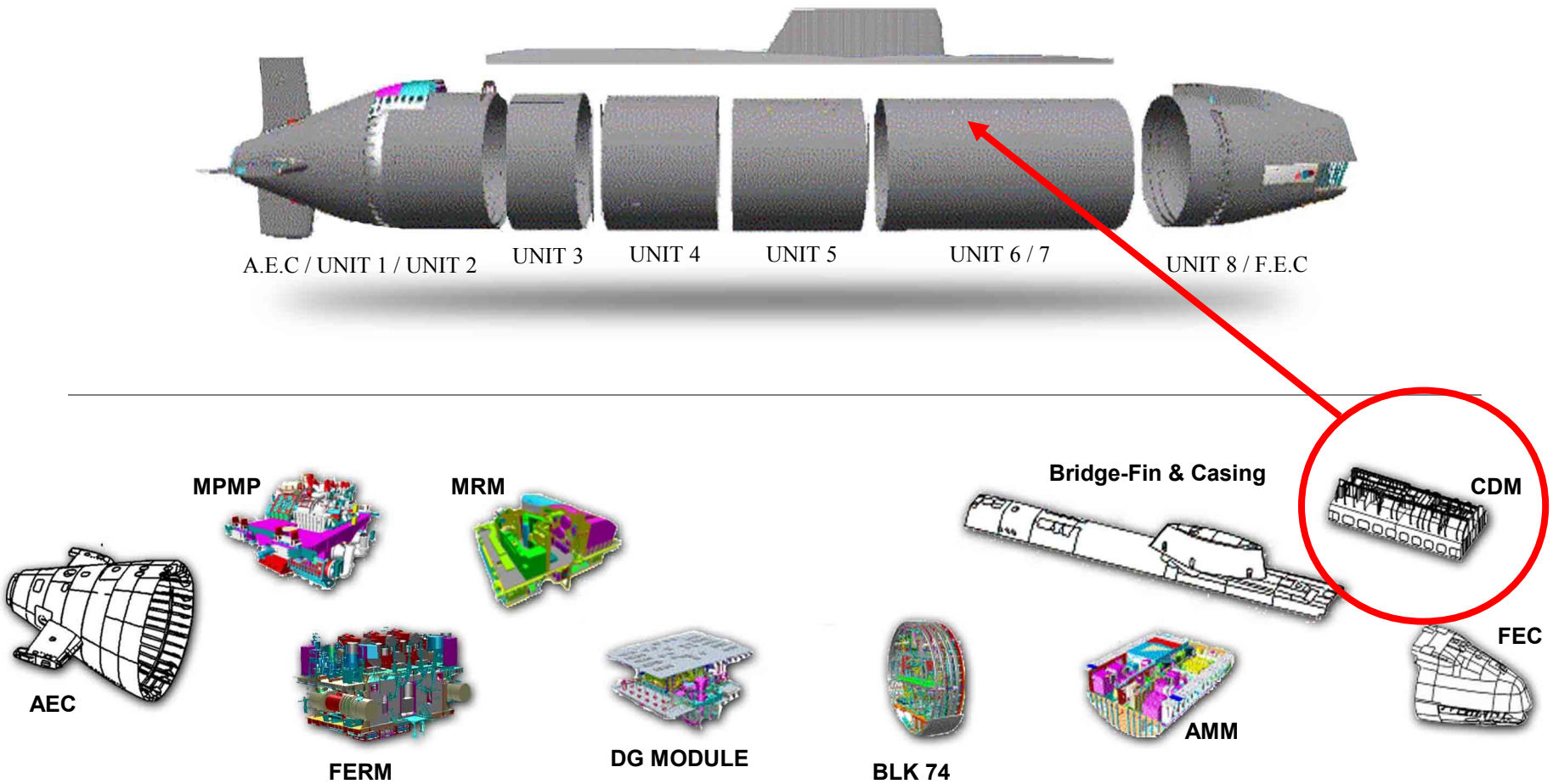

Command Deck Module (CDM)

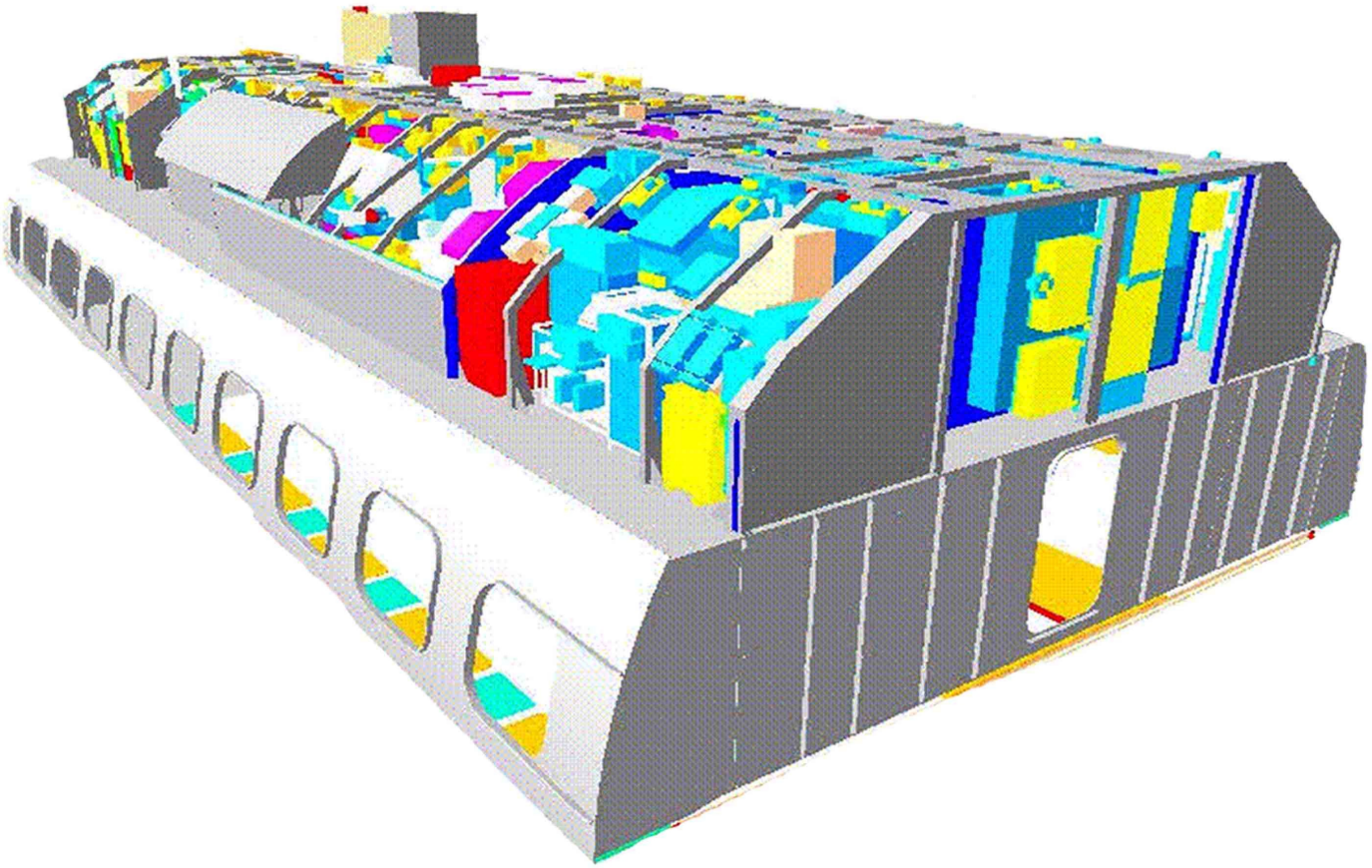

Combat System

- All electronics masts
- Visual, communications, radar etc.
- Navigation - inertial sensors
- Combat management system
- Decoys, various sensors, intelligence and SF, Tomahawk Launch

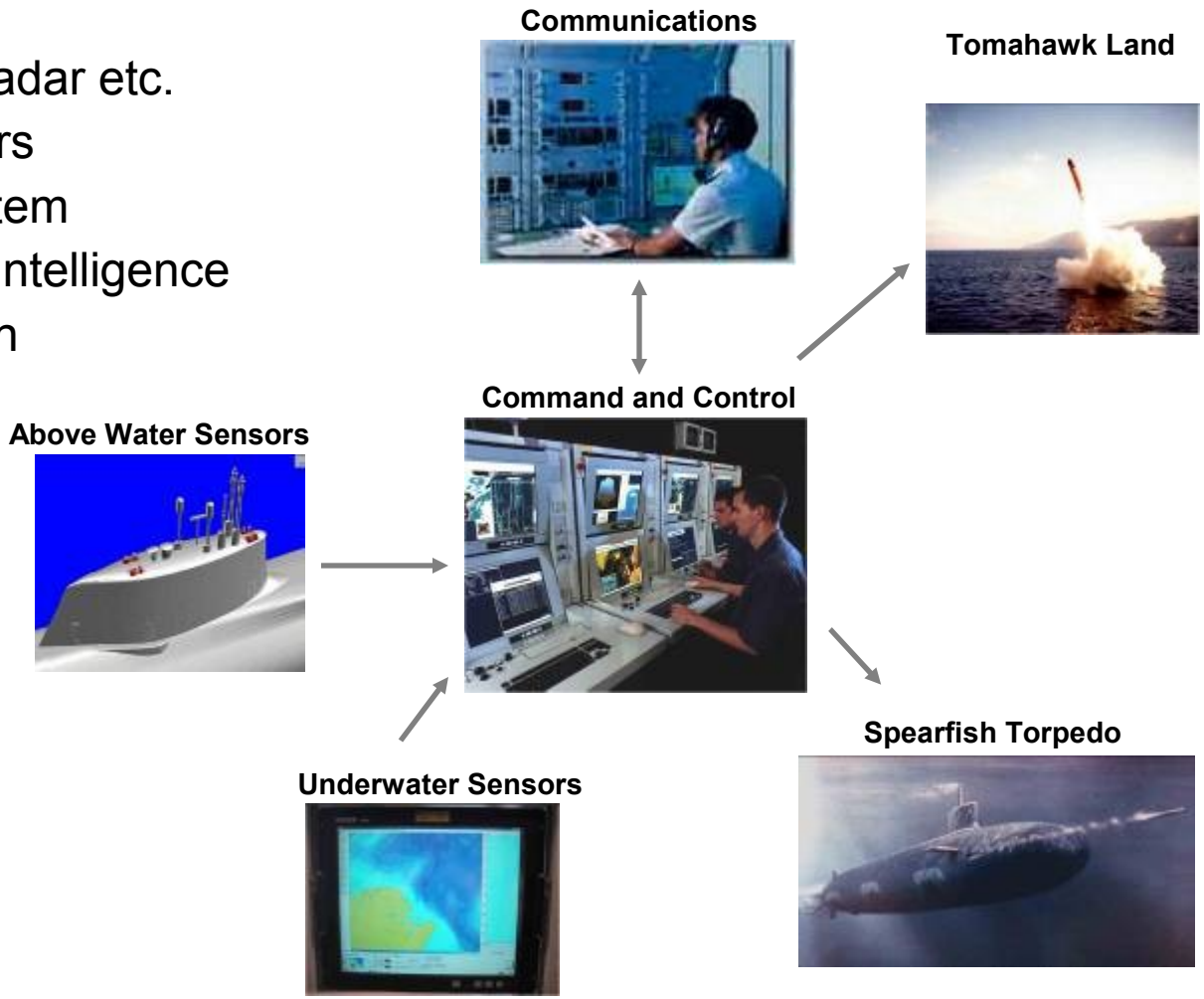

Warspite Facility

Transporting CDM from Warspite to DDH

Command Deck Module

DDFOC – Shipping of Command Deck Module

DDFOC – Shipping of Command Deck Module

Submarine Assembly – Modules

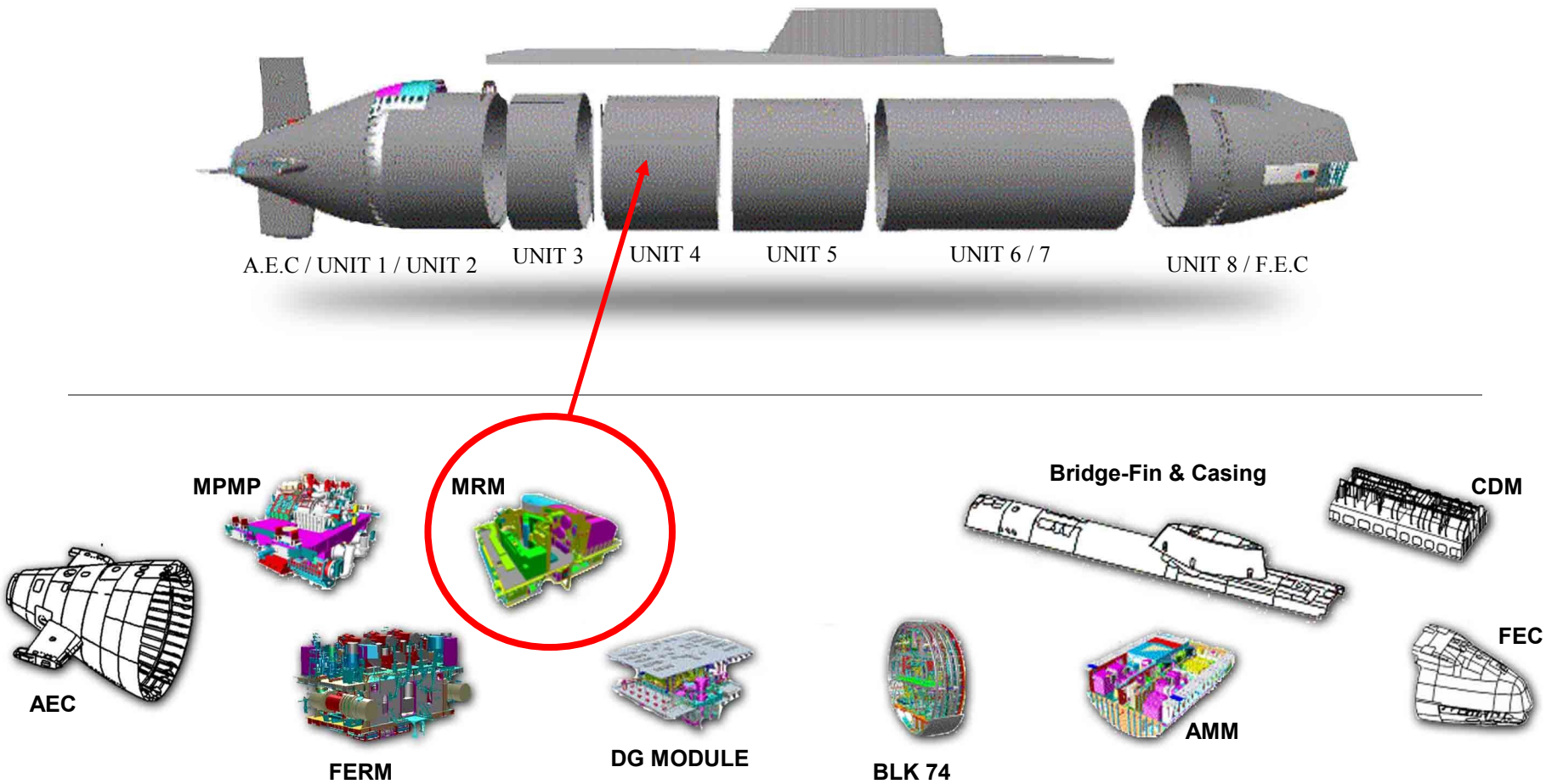

Submarine Assembly – Major Modules

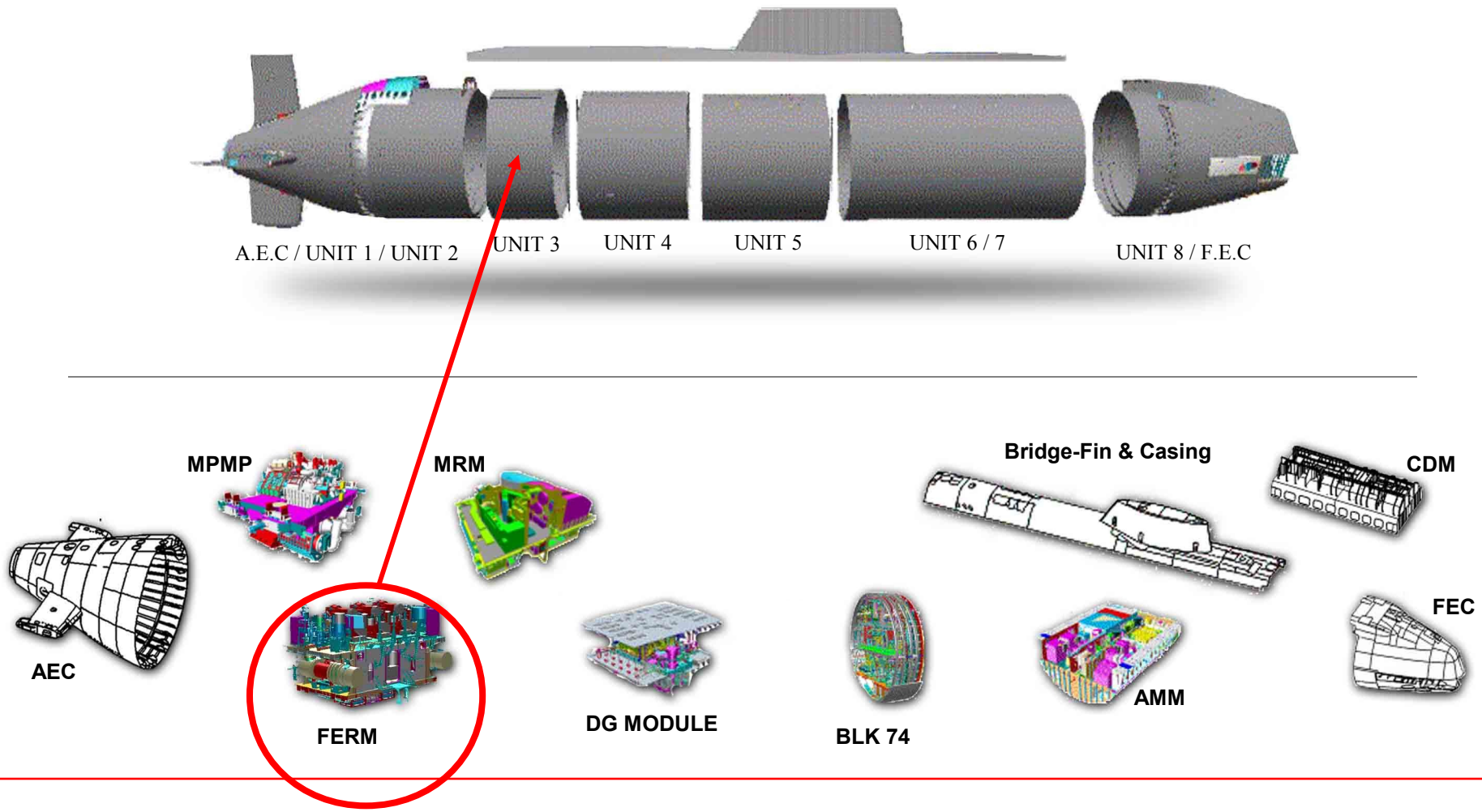

Submarine Assembly – Major Modules

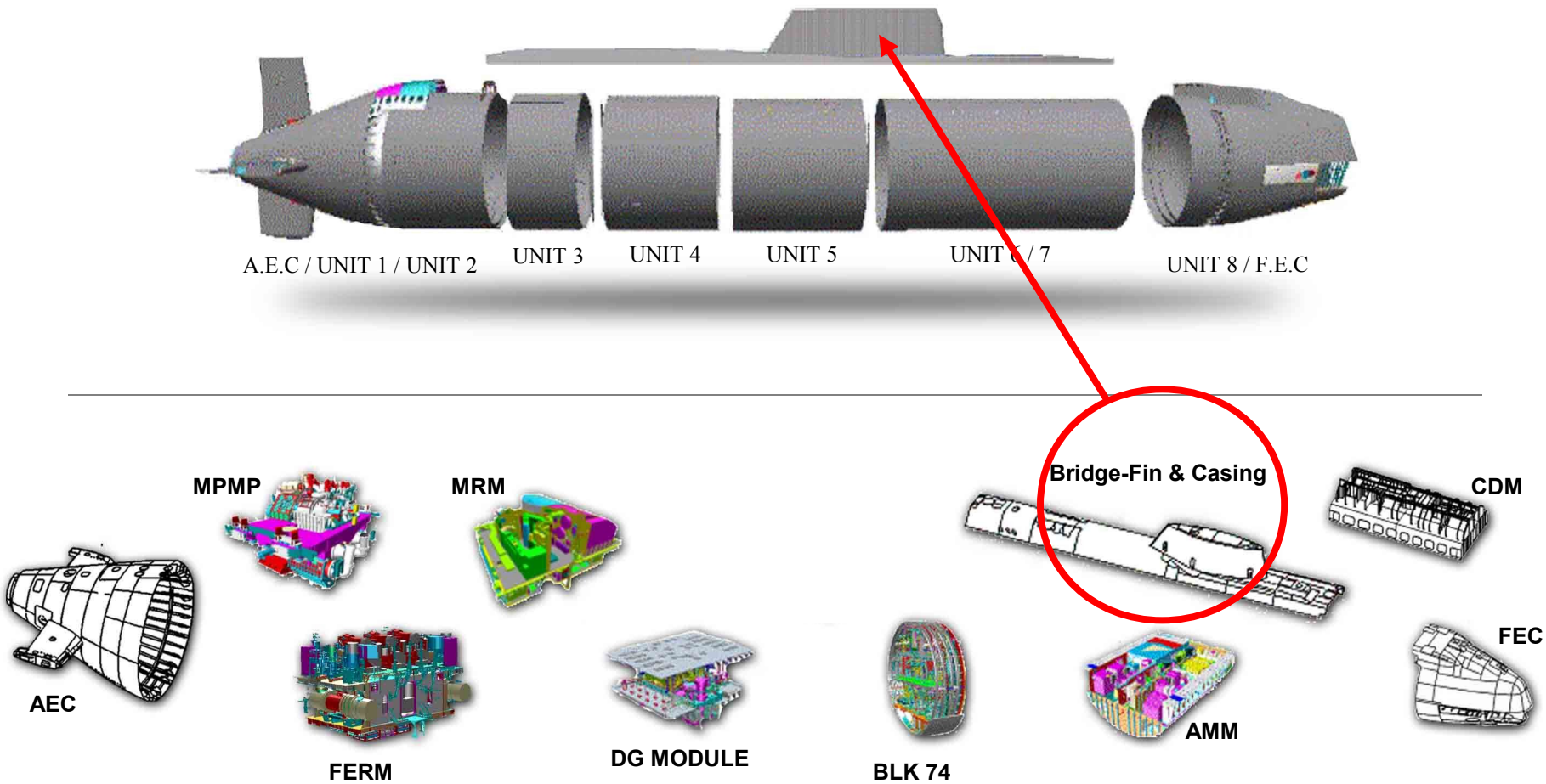

The Finished Article

Summary

- Complex Engineering, Manufacturing and Test programme
- Highly skilled Resource
- Teamwork Essential
- Design process is iterative
- Structured Design approach
- Design above anything must be ***SAFE***
- Improved working environments and methods
- There's always more we can do to improve……

Astute Boat 4 and beyond

- Boat 4 based on boat 1-3 but…
  - At least 15% lower purchase cost (real terms)
  - Same capability.
  - Overcome obsolescence issues.
  - Same or lower in service costs.
  - At least as safe (preferably safer).

- Boats 5-7 are based on boat 4 but…
  - At least 5% lower purchase cost (real terms).
  - Same capability.
  - Lower in service costs.
  - Improved safety.

Sales Pitch!

- If you think your company has a product or technology that you think would be of benefit to design or construction of a nuclear submarine then let me know. We welcome alternative thinking and products.
- Our workload going forward means that we have numerous opportunities for design engineers in all disciplines.
- We also take on around 40 graduates across a wide range of areas each year for a structured training programme
- So let me know if you or someone you know are interested.

kevin.young@baesystems.com